SPECIFICATION SHEET - Model VS5001-L

Belted Scan and Bag/Pass Checkout

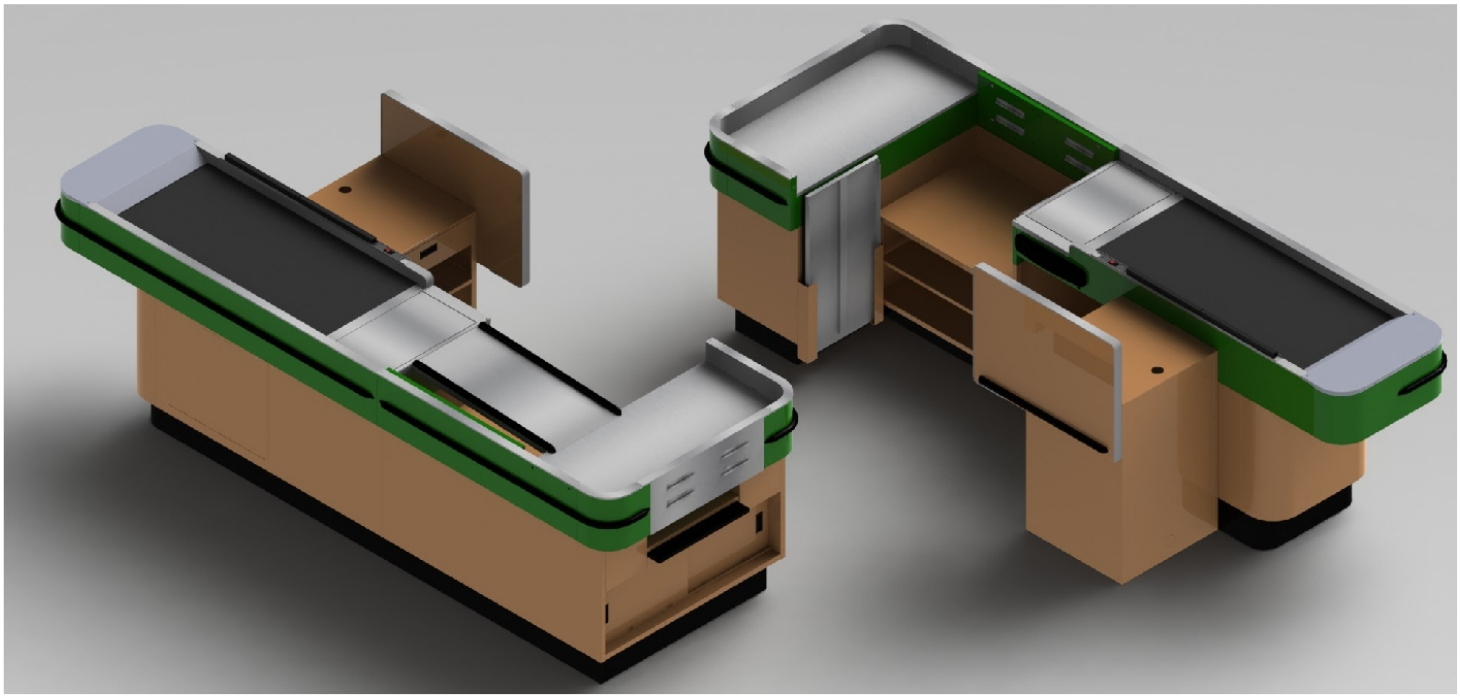

FEATURES

- Scan and pass / scan and bag operation
- Radius design
- Storage for chute provided for cashier bagging operation
- Black plastic bagging shelf
- Standard 21" cashstand with utility drawer and metal security shield
- Optional keyboard and check-writing shelf
- Cashier lean pad
- Electrical outlets included
- 5 optional conveyor lengths
- 2 optional cashstand widths, 19" & 24.5"
- Durable welded construction
- Other options available

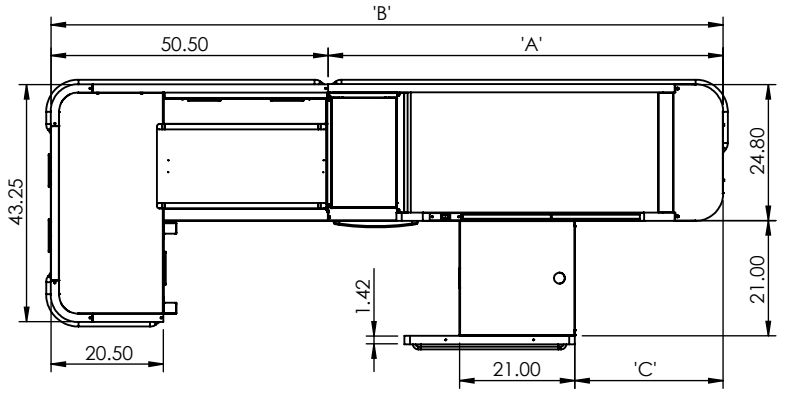

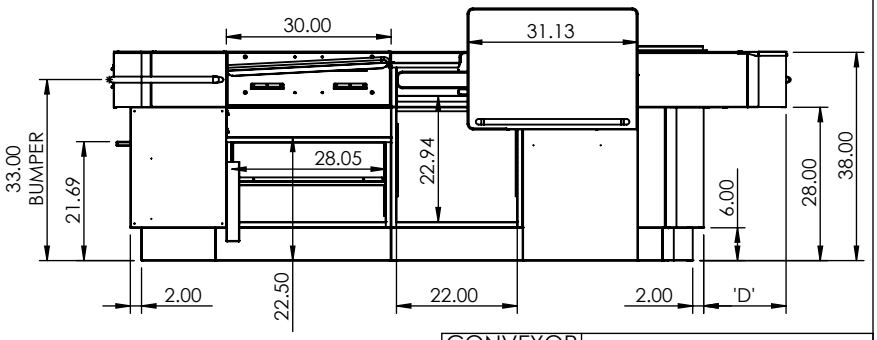

CONVEYOR LENGTH (FT.)	DIMENSION (IN.)			
	A	B	C	D
8'	96.00	146.50	51.00	15.00
7'	84.00	134.50	39.00	15.00
6'	72.00	122.50	27.00	15.00
5'	60.00	110.50	15.00	8.00
4'	48.00	98.50	3.00	3.00

For additional information and options contact Lyons Store Fixtures.

LYONS STORE FIXTURES

11301 Electron Drive • Louisville, KY 40299 • Toll Free: 1-866-478-2372 • Fax: 1-866-478-2373